AquFlow - (Formerly Hydroflo) Metering Pumps

AquFlow Series 900

Hydraulically Actuated Diaphragm Metering Pump

INSTALLATION, OPERATION AND MAINTENANCE MANUAL

This page intentionally blank.

Table of Contents

Warranty

AquFlow warrants its products against defects in workmanship or material under specified use and service for a period of 24 months from placement into service or 30 months from date of shipment. The obligation and liability of AquFlow is limited to repairing or replacing (at its option) such allegedly defective goods as are returned to AquFlow's plant. No liability is assumed for removal or reinstallation costs, warrants of merchantability or fitness for a particular purpose except as specified. Liability for consequential damages (including personal injury) is hereby excluded; liability in any event being limited to the original purchase price of the good involved.

Defects shall not include decomposition by abrasion, chemical action, water, or caused by the presence of materials or conditions not specified. The component materials set forth in a proposal and/or the specifications of an order are recommended by AquFlow for the particularapplication. But such recommendations shall not be construed as warranty or guarantee against wear and/or corrosion, such recommendations are subject in all cases to verification and acceptance bypurchaser. Any warranty on equipment and accessories furnished by outside manufacturers shall belimited to the warranty of the respective equipment and/or accessory manufacturer of such goods. When repairs or replacements are made under our warranty, all freight costs will be paid by thepurchaser.

AquFlow will not be responsible for the work performed by others. AquFlow reserves the right to void applicable warranties if work by others is determined by AquFlowto be improperly executed or not required.

Read this instruction completely before installing, operating or servicing the AquFlow® Series 900 pump!

Always keep safety considerations foremost! Use proper tools, protective clothing and eye protection when working onAquFlow products. Install the equipment with a view toward assuring safe operation. Be extremely careful when working in the presence of hazardous substances!

Safety Pointers

In this manual the **NOTE**, **CAUTION**, and **WARNING** pointers have the following meanings.

Note: This heading is used if a special feature or operating requirement is being pointed out.

CAUTION: This heading is used to denote when failure to follow the operating instructions as prescribed herein can lead to pump or system damage.

WARNING*:** This heading is used to denote when failure to following operating instructions as prescribed herein can lead to ***personal injury or accident.

General Description

The Diamyte is a unique disc diaphragm metering pump specifically designed for low-flow fluid metering applications. The hydraulically balanced diaphragm, with no mechanical connection to the plunger, is particularly suitable for pumping costly, aggressive, or hazardous liquids without leakage.

Precision of the Diamyte is within ±1% of set capacity under constant conditions of viscosity, vapor pressure, temperature, pressure and capacity setting. Capacity is easily adjustable while the pump is running or stopped, either with the standard manual micrometer stroke control or with the optional electric capacity control.

A mechanically actuated refill valve automatically maintains the correct oil volume in the displacement chamber. This type of refill system eliminates troublesome field adjustments associated with vacuum type refill valves, thus improving NPSH requirements. An internal hydraulic relief valve protects the pump and drive from damage due to suction and discharge line blockage.

Principal of Operation

In a hydraulically-actuated disc diaphragm liquid end, the reciprocating pump plunger alternately forces hydraulic oil against a diaphragm and then draws the oil back into the plunger bore. This action causes the diaphragm to flex between limiting contour plates. There is no mechanical connection between the diaphragm and plunger.

On each suction stroke of the pump the plunger causes a negative pressure to appear on the oil side of the diaphragm, thereby allowing process fluid to flow into the displacement chamber through the suction ball check valve under suction head pressure. On each suction stroke, the discharge ball check is seated, and the suction ball is unseated to allow fluid entry. See figure 1.

On each discharge stroke of the pump the plunger forces hydraulic oil against the diaphragm, deflecting it towards the process side contour plate and thereby expelling the process fluid from the displacement chamber through the discharge check valve. See figure 2.

On each discharge stroke, the suction ball check is seated and the discharge ball check is unseated to allow the metered volume of fluid that entered the displacement chamber to be expelled through the discharge check valve. This sequence of valve operation prevents back flow and assures fluid movement from the suction port through the displacement chamber and out the discharge port to the process.

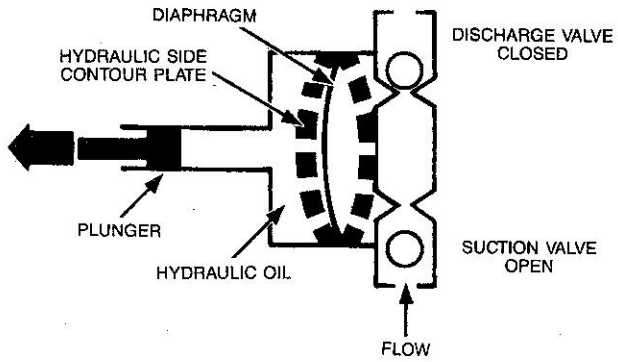

Figure 1. Suction Stroke

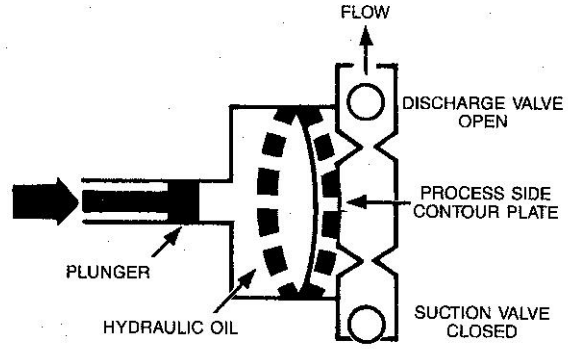

Figure 2. Discharge Stroke

INSTALLATION INSTRUCTIONS

Prior to shipment, each pump is factory tested at operating pressure, using water. The internal relief valve is preset to meet the operating conditions specified on the purchase order.

Protective plastic caps are used to cover the suction and discharge check valves during shipment.

The pump reservoir chamber has been filled with hydraulic oil, and only gear oil needs to be added.

Note: Due to the AquFlow® Series 900's unique low-flow design, which requires extremely close internal tolerances, correct installation becomes critical to assuring proper pump operation.

STORAGE

If the pump is not going to be installed immediately, the following steps must be taken.

1. Leave the pump in the original shipping carton and in an upright position.
2. Leave all shipping plugs in place.
3. Store pump indoors in a dry ambient atmosphere above 32° F.
4. Contact the motor manufacturer for specific motor storage information

CAUTION: To prevent damage or misalignment of the pressure chamber, it is necessary to leave the pump bolted to its factory suppled baseplate. Failure to do so will void the warranty.

LOCATION

1. The pump installation site should provide easy access for capacity adjustment, routine maintenance, and where possible to protect the pump from the elements and from leaks or drips from process equipment.
2. The pump should be located on a level surface. While not required, it is suggested that the pump be bolted on a concrete pad or slightly raised platform above floor level to protect pump from washdowns.
3. Pumps installed outdoors should be protected by a roof, and provision made to avoid temperatures below 40° F.

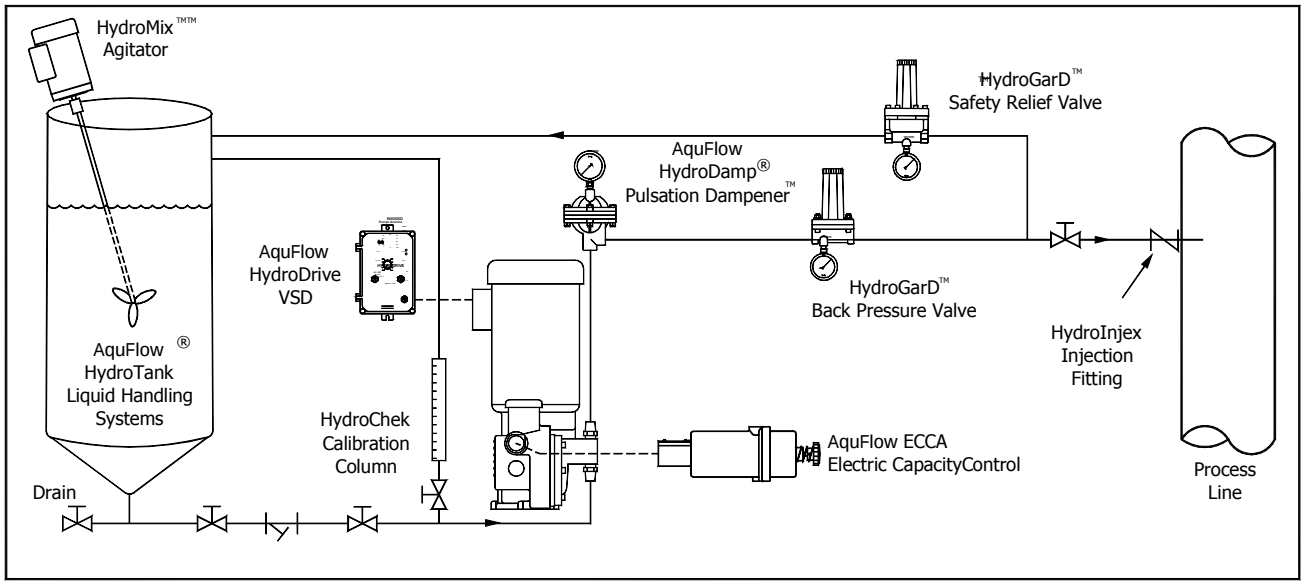

Figure 3. System Diagram

PIPING

GENERAL

1. Piping materials must be compatible with the liquid being pumped, and rated to withstand the maximum pressure and temperatures of the system.
2. Always keep the AquFlow Series 900's extremely low-flow characteristics in mind when sizing the piping system. Avoid problems that could result from oversized piping.
3. Use pipe sealant(s) sparingly. Excess sealant could dislodge and block pump check valves.
4. Shut-off valves and unions (non-restrictive full port type) installed in the suction and discharge pipe lines will facilitate pump servicing.
5. Mechanical tubing is best suited for this type of pump, since it eliminates stress areas associated with hard piping.

SUCTION

1. Before connecting the piping to the pump FLUSH THE SUPPLY VESSEL AND PIPING THOROUGHLY to assure removal of all debris. Failure to do so may result in foreign matter entering and damaging the pump.
2. Keep the suction line as short and straight as possible. A FLOODED SUCTION or gravity feed of the process fluid to the pump inlet IS REQUIRED. **A suction line strainer with 100-mesh screen must be installed** to insure against foreign matter entering and damaging the pump. It is extremely important that solids be prevented from entering pump, since check valves and internal passageways are small and easily blocked.

Note: The standard AquFlow Series 900 pump liquid end configuration is not suitable for suction lift applications.

3. Suction piping must be absolutely air tight to assure accurate pump performance. If air or gas is allowed to accumulate inside the pump head, the output will become erratic or stop altogether.
4. Do not spring piping when connecting to the pump. Support the piping as necessary to prevent strain on the liquid end components. Flexible tubing can be used if temperature and pressure permits. If flexible suction line is used, be sure that selection and installation will prevent wall collapse and thus a starved suction condition.
5. Where process fluids may solidify, crystallize, etc., provision must be made to flush the pump and piping regularly, and prior to shutdown.

DISCHARGE

1. Install adequately sized pipe with a pressure rating in excess of the pressure relief valve setting.
2. A minimum positive pressure differential of 30 psi between the suction and discharge check valves is recommended for proper seating of the ball checks. A back pressure valve installed in the discharge piping will improve pump performance in those applications where the back pressure may be too low.

WARNING: The pump's internal relief valve is designed primarily to protect the pump and drive in the event the discharge system is blocked while the pump is in operation!

If there are other sources of pressure in the system, an external safety relief valve should be installed in the pump discharge line as close to the pump as possible, and BEFORE any isolation valve! This safety relief valve must be piped back to the supply vessel!

POWER CONNECTIONS

1. Check the nameplate rating of the motor and any auxiliary electrical equipment against the available power supply before making connections. Direction of rotation of the motor is important, and should be clockwise when viewing the motor from the top. Jog motor to check rotation.
2. Standard wiring and conduit piping practice in accordance with local electrical codes should be followed. A motor starter with a properly sized thermal overload heater is necessary for motor protection.

CAUTION: Motor starters with properly sized thermal heaters are necessary for motor protection. these are typically supplied by others.

3. Provide adequate ventilation for the drive motor.

Note: Motors are warranteed by the motor manufacturer. You can obtain prompt local service by consulting the motor manufacturer's authroized service station nearest you as listed in the yellow pages. We can also assistyou in obtaining this information.

Do not return motors directly to AquFlow.

STARTUP INSPECTION

Several items should be checked after the pump has been installed and prior to initial startup.

1. Series 900 pumps are shipped with hydraulic oil in the reservoir chamber. Remove the oil reservoir cover by removing the four (4) cover screws (6624). Check the oil level to be certain that it has not dropped below the level shown below. Add oil as needed.
2. Oil must be added to the gear reducer. NPA supplies an initial fill of AGMA SAE 140 General Purpose Gear Oil with each pump.
3. Be certain the two (2) crosshead grease fittings have been adequately lubricated, using a good quality chassis lube.
4. Check to be certain that the electrical supply matches the pump motor nameplate electrical characteristics.
5. Check to be certain that accessory components and fittings have been installed in proper orientation as shown in figure 3.
6. Jog motor to assure clockwise rotation.
7. Make certain that suction and discharge valves are open prior to pump startup. Do not operate the pump with the suction valve closed, as damage to the pump may result.
8. It is important that pump suction and discharge lines are free of entrained air. Fill the supply vessel with fluid and open the suction vessel supply valve. Vent the discharge to atmosphere at a point lower than the fluid level in the supply vessel.

Set the micrometer at 100% and start the pump. This will permit complete purging of the air from the suction supply line and the pump liquid end. After the fluid runs clear (no air bubbles) turn off the pump, close the suction supply valve and reconnect the discharge line to the system.

PUMP CALIBRATION

Each pump is tested at the factory prior to shipment to assure proper operation at the maximum capacity and discharge pressure specified. For precise capacity control in the field, a calibration test under actual pumping conditions is necessary.

Allow the pump to operate at full capacity for a minimum of 30 minutes, with suction and discharge valves open before taking calibration readings. This will clear any air out of the pump, and fill the pipe lines.

The pump should be calibrated by measuring the decrease in liquid level pumped from a HydroChek™ calibration column installed in the suction line as shown in figure 3. Follow the instructions provided by the calibration column manufacturer.

Another, albeit less desirable method of calibration is to collect and measure the pumped liquid at the pump discharge port in a graduated bucket or tank.

> ***WARNING:*** use extreme care when performing a calibration test using open bucket or tank method, and be extremely careful when working in the presence of hazardous substances!
>
> Wear suitable protective clothing and eye sheilding for protection!

Typically, test samples are collected at 25%, 50%, 75%, and 100% capacity settings. A straight line results when these points are plotted on graph paper. This graph can be used as a calibration curve for intermediate settings as long as suction and discharge conditions remain constant.

It is important to realize that the sample at 50% will not necessarily be exactly 1/2 of that at 100%, nor will any other sample points be a specific percentage of the 100% value. However, the sample value will lie along a straight line that can be used as a calibration curve, and the pump will give repetitive samples at the same setting. This last characteristic is what makes the AquFlow Series 900 pump effective, it will meter chemicals precisely, within ±1% of capacity setting over long periods of time.

> **Note:** As operating discharge pressures increase, there are additional hydraulic system losses which are constant for any given discharge pressure.
>
> This results in a loss of maximum capacity output on the pump, at the rate of 1.5% for every 100 psi increase in discharge pressure.

MAINTENANCE INSTRUCTIONS

PREVENTATIVE MAINTENANCE

The Series 900 metering pump is designed for continuous service with maximum reliability and minimum downtime. However, good engineering dictates certain visual periodic checks to assure that operating problems have not developed.

1. Check both hydraulic and gear oil levels periodically, to be sure they are at the proper level marks.
2. Inspect the liquid end assembly, including the suction and discharge connections for any indication of leakage.

3. Lubricate the two (2) crosshead fittings (6620) monthly, using a good quality chassis lube.
4. Lubricate the felt cam pad (6672) monthly, using AGMA 7 SAE 140 oil.

OIL CHANGE

1. The gear reducer oil should be drained twice a year and replaced with clean fluid. Refer to page 4 for proper oil selection.
2. The displacement chamber, because it is a sealed unit, normally does not require a change of hydraulic oil. In the event of a diaphragm rupture, hydraulic oil must be changed as outlined under “diaphragm replacement”.

DIAPHRAGM REPLACEMENT

Except in the unlikely event of a rupture, the diaphragm normally does not require replacement. Should a diaphragm failure occur, the following steps must be followed.

DISASSEMBLY

1. Wear suitable protective clothing and eye shielding.
2. Remove and lockout electrical power to the pump.
3. Isolate and disconnect the piping from the suction and discharge check valves.
4. Thoroughly flush process fluid from the liquid end.
5. Remove the eight bolts (6640) from the diaphragm head and remove head (6639) from the displacement chamber.
6. Remove diaphragm (6643), o-ring (6644), contour plate (6642) and support plate (6641) from the displacement chamber. Clean and inspect parts for damage such as cracks, deterioration from chemical action, etc, and replace parts as necessary. Discard the diaphragm!

REASSEMBLY

1. Place a new o-ring (6644) in the diaphragm o-ring groove. Place the support plate (6641) in the displacement chamber as shown in figure 5, oriented with peripheral notches in the vertical position (12 o’clock) and dished side facing out.
2. Place the contour plate (6642) in the head, oriented with the peripheral notches in the vertical position (inline with the check valve ports) and dished side facing out.
3. Center a new diaphragm (6643) over the support plate (6641), within the diaphragm cavity of the displacement chamber. Push in at the center of the diaphragm to hold it in place.

Note: To prevent leakage, never reuse old diaphragm.

4. Center the head with contour plate in place over the diaphragm, with the direction of flow arrow facing upward in the 12 o’clock position.
5. Hold the head in place with two head bolts (6640) (fingertight) in any diagonal location.
6. Install the remaining six head bolts and torque them in steps to 135 in/lbs. The bolt tightening sequence should be diagonally and in a clockwise direction.
7. Remove the reservoir cover (6623) and the internal relief valve (6628) using a 3/4" socket.
8. The pump hydraulic system must be filed from the bottom. To accomplish this loosen the bleed screw (6629) in the rear underside of the head area. Fill a plastic squeeze bottle (or use hand pump, if available) with hydraulic fluid as specified on page 4.

   Place a twelve inch length of 3/16" Tygon tubing over the nozzle of the bottle and squeeze until all the air bubbles are purged from the tubing. Place the free end of the tubing over the bleed screw and open the bleed screw using a 5/16" wrench. Squeeze the bottle until there is 1/4" of hydraulic fluid in the bottom of the reservoir.

   Maintaining slight pressure on the bottle, close the bleed screw and remove the tubing. Replace the internal relief valve and continue filling the reservoir from the top to the recommended level. This procedure of filling the hydraulic system is necessary to insure all air is purged from the oil side displacement chamber.
9. Remove the check valves from the head, then clean and inspect them for wear. The balls must be free falling, and must be able to hold water. This can be determined by filling the cavity around the ball with tap water while applying 20" Hg vacuum on the opposite end. If the water runs out within a few seconds the valve must be blown out with compressed air and checked again. If the valves cannot be made to hold water they must be replaced.
10. Reinstall the check valves in the head, with ball and guides facing upward (in the direction of the flow arrow) using a thread sealer such as Loctite type PST sealant.

CAUTION: When reinstalling check valves, care must be taken to prevent joint compound, pipe tape and debris from entering and interfering with check valve operation.

RETURNING PUMP TO SERVICE

1. Remove and clean the suction line screen.
2. Reinstall the screen and reconnect the suction and discharge lines to the pump.
3. Open any suction and discharge valves.
4. Be certain there is sufficient fluid in the supply vessel.
5. Set the micrometer knob at 0% on the capacity scale.
6. Check to see that all moving parts are free and then apply power to the pump.
7. Slowly increase the capacity adjuster to 100%. It may be necessary to open the discharge to an approved catch area to purge the air from the suction line and pump head before pumping action of the process fluid will take place. Refer to STARTUP INSPECTION, paragraph 8.
8. Once the air is purged from the system close the discharge to atmosphere and check all connections for leaks.
9. Cycle the micrometer knob up and down several times while checking for proper operation. A capacity check at 100% is recommended at this time to establish the data plate output of the pump.
10. Remove power from the pump and check the oil levels. Adjust as necessary and replace all covers.
11. Pump is ready to be returned to service.

ADJUSTING INTERNAL RELIEF VALVE

The internal relief valve is factory set to open at a pressure slightly above the pump operating discharge pressure. Never set the valve lower than 20% above maximum discharge pressure.

1. Wear suitable protective clothing and eye shielding.
2. Remove power from the pump, and close the suction line valve.
3. Remove discharge piping from the pump, and install a stand pipe with a pressure gauge and shut-off valve at one end. The pressure gauge should be capable of pressures 50% greater than the desired relief valve setting. The gauge must be located between pump check valve and shut-off valve.
4. Remove the oil reservoir cover (6623) by removing the four (4) cover screws (6624).
5. Close the shut-off valve on the stand pipe and open the suction line valve.
6. Set pump capacity control to 100%.
7. Open shut-off valve on the stand pipe, apply power to pump and allow the process fluid to drain into a suitable container. This will purge any air from the pump head and stand pipe.

> ***WARNING:*** Use extreme care when draining process fluid into an open bucket or container and be extremely careful when working in the presence of hazardous substances.

8. Slowly close the shut-off valve to restrict flow and increase discharge presure to the desired point.

> ***WARNING:*** Never completely close the shut-off valve and dead head the pump. This may cause system pressure to rise to a dangerous level. Equipment damage and personnel injury may occur.

9. Observe the pressure increase on the gauge. If the pressure exceeds desired relief setting quickly open the shutoff valve to relieve pressure in the line.

   Turn the internal relief valve adjuster (6628), located on the internal relief valve counterclockwise to decrease the relief pressure. If relief pressure is too low turn the adjuster clockwise to increase relief pressure.
10. Repeat step 8 until the maximum gauge reading equals the desired relief valve pressure setting.
11. Turn off the pump and open the discharge valve to relieve any residual pressure. Remove pressure gauge and place pump in routine service.

> **CAUTION:** Do not run the pump with the relief valve adjuster “bottomed out” as severe damage to pump and piping could result.

ADJUSTING MECHANICAL REFILL VALVE

The mechanical refill valve is factory set, and normally does not require adjustment unless the displacement chamber has been removed or loosened.

1. Wear suitable protective clothing and eye shielding.
2. Remove electrical power from the pump.
3. Remove the oil reservoir cover (6626) to expose bell crank.
4. Remove the sheet metal covers (6618) and (6671) from the side of the pump to expose crosshead (6603), bearing (6616), and adjuster (6658).
5. If the pump motor has a TEFC enclosure, then the motor shaft can be turned via the fan. If pump motor has a TENV enclosure the motor must be jogged electrically. Rotate motor shaft until the crosshead is in its fully retracted (suction stroke) position. At this point the crosshead and bearing will be positioned as shown in drawing 15000.

6. Be certain the lever rod (6655) is properly seated in lever (6659).
7. Loosen jam nut (6657) located on the lever rod (6655). Turn the lever rod (6655) into adjusting block (6658) to allow free rocking motion of the bell crank (6653). Turn lever rod (6655) out of the adjuster block (6658) just enough to take up the play that allows this free rocking motion at the bell crank. This is the reference point for our adjustment.
8. Place a dial indicator over the end of the bell crank (6653) closest to the diaphragm head.
9. Turn lever rod (6655) out of the adjusting block (6658) until there is .030 deflection on the dial indicator needle. Carefully tighten jam nut (6657) while holding lever rod (6655).
10. Rotate the motor shaft until the crosshead and bearing has made one complete cycle back to its fully retracted position while observing needle dial movement on dial indicator. There should be .025 to .030 deflection. If the bell crank does not fall within these limits repeat steps 7 and 9.
11. Wet the felt lubricator located on the upper lefthand frame bolt (6672). See lube schedule on page X.
12. Remove dial indicator, adjust oil level as required, and replace crosshead and reservoir covers.
13. Apply power and check pump output.

PARTS ORDERING INSTRUCTIONS

Always have the complete AquFlow Series 900 pump model and serial number available when contactingAquFlow for parts or service. This information can be found on the data plate located on the side of the pump.

Should it be necessary to send the pump to the factory for repair or service, thoroughly flush the pump liquid end of all process fluid, drain all hydraulic and gear oil, and call the factory for a return authorization number. A material safety data sheet will be required. Equipment returned without a return authorization number will not be accepted.

Direct all inquiries and orders to your local representative or directly to:

AquFlow
1642 McGaw Avenue
Irvine, CA 92614
P: (949) 757-1753 F: (949) 757-1753
www.aquflow.com

PUMP TROUBLESHOOTING CHART

The following chart covers common problems, probable causes and remedies as related to metering pump operation, and will serve as a basis to help isolate and remedy these problems. Each section lists probable causes and remedies in systematic order of probability.

MOST COMMON STARTUP PROBLEMS

Most problems that arise during or shortly after startup are a result of improper pump installation. Each AquFlow pump is tested and in good working order when shipped. Before making any adjustments to or disassembling any part of the pump, check for the following. Frequently, pumps returned to factory for startup repair are found to be in perfect working order.

	PROBABLE CAUSE	REMEDIES
Most problems that arise during or shortly after startup are a result of improper pump installation. Each Hydroflo pump is tested and in good working order when shipped. Before making any adjustments to, or disassembling any part of the pump, check for the following. Frequently, pumps returned to factory for startup repair are found to be in perfect working order.	1. Insufficient hydraulic oil. 2. Clogged or blocked check valves, or check valves lodged by solids. 3. Clogged or blocked suction strainer. 4. System discharge pressure greater than pump internal relief valve setting. 5. Starved suction.	1. Fill to proper level. 2. Clean or replace (suction line not flushed prior to making connection to pump, thereby permitting solids or debris such as pipe sealant, tape, etc., to enter and block check valves. 3. Clean or replace. 4. Check and reset relief valve (within pump rating). 5. Insufficient NPSH. Shorten suction piping, increase suction piping size or suction head.

PROBLEM	PROBABLE CAUSE	REMEDIES
Pump motor fails to start.	1. Blown fuse or tripped breaker. 2. Open thermal overload in motor starter. 3. Low line voltage. 4. Open circuit limit switches, timers or other control devices in pump motor starter circuit. 5. Motor damage.	1. Replace fuse after cause of overload corrected. 2. Reset after correcting cause of overload. If malfunction occurs, check heater size. 3. Determine cause and correct. 4. Reset 5. Check motor for physical damage that may hinder operation.

PROBLEM	PROBABLE CAUSE	REMEDIES
Pump runs but fails to deliver.	1. Insufficient hydraulic oil. 2. Check valve(s) lodged open by solids. 3. Worn or dirty ball check valves. 4. Suction or discharge line clocked. 5. Isolation valve closed. 6. Pump is not primed. 7. Check valves installed incorrectly. 8. Solids build-up between diaphragm and contour plate, preventing diaphragm movement. 9. System pressure too high for internal relief valve setting. 10. Mechanical refill valve out of adjustment.	1. Fill to proper level. 2. Clean or replace. 3. Clean or replace. 4. Clean line. 5. Open valve. 6. Allow suction line and pump head to fill with liquid before pumping against pressure. 7. Remove and reinstall correctly. 8. Remove and clean liquid end. Replace diaphragm. Infrequent occurrence when pumping liquids that contain particles that settle out. (Tubular diaphragm liquid end recommended.) 9. Adjust internal relief valve. 10. Adjust mechanical refill valves.

PROBLEM	PROBABLE CAUSE	REMEDIES
Pump fails to deliver rated capacity.	1. Incorrect capacity adjustment setting.	1. Readjust capacity setting.
	2. Insufficient hydraulic oil.	2. Fill to proper level.
	3. Starved suction.	3. Increase suction piping size or suction head.
	4. Internal or external relief valve too low for system conditions; is relieving.	4. Reset valve to correct setting.
	5. Leak in suction piping.	5. Repair piping.
	6. Excessive suction lift.	6. Decrease lift.
	7. Liquid close to boiling point.	7. Cool liquid or increase suction head.
	8. Liquid viscosity too high.	8. Reduce viscosity of liquid: change ball material or SIAE.
	9. Worn or dirty ball valves or seats.	9. Clean or replace.
	10. Incorrect motor speed.	10. Check for damage. Match line voltage/frequency to motor dataplate.
	11. Mechanical refill valve out of	11. Check mechanical refill valve.
	12. Air/gas entrapment.	12. Vent discharge to atmosphere.

PROBLEM	PROBABLE CAUSE	REMEDIES
Pump operates erratically.	1. Partially clogged/dirty suction strainer.	1. Clean or replace.
	2. Insufficient hydraulic oil.	2. Fill to proper level.
	3. Leak in suction piping.	3. Repair piping.
	4. Internal or external relief valve is relieving.	4. Reset valve to correct setting.

LUBRICATION SCHEDULE

TYPE	*DESCRIPTION*	*LOCATION*	*INTERVAL*	*AMOUNT*	*LEVEL*
OIL	AGMA 140 GEAR OIL	SPEED REDUCER	6 MONTHS	~1-1/2 Pts~ 710mL	1/2" (11MM) FROM TOP OF REDUCER HOUSING
OIL	DEXRON II, III ATF	LE HOUSING RESERVOIR	SEE INSTRUCTIONS	~1/2Pts~ 200mL	1/4" (6.5MM) FROM TOP OF RESERVOIR
OIL	AGMA 140 GEAR OIL	CAM LUBRICATOR	6 MONTHS	WET FELT LUBRICATOR	NA
GREASE	HIGH QUALITY MOLY TYPE	GREASE FITTINGS	6MONTHS	~.13oz.~ 3.7mL	NA

AquFlow® Series 900
Drawing 15000

ITEM	QTY	DESCRIPTION
6601	1	MOTOR/REDUCER
6602	1	PUMP FRAME
6603	1	CROSSHEAD
6604	1	FOLLOWER, CAM
6605	1	ADJUSTER, CAPACITY
6606	1	SPOOL, ADJUSTER
6607	1	HOUSING, ADJUSTER
6608	1	STOP
6609	1	SPRING, PLUNGER
6610	1	MICROMETER KNOB
6611	1	JAM NUT
6612	2	ADJUSTER, RETAINING SCREW
6613	1	CAPACITY SCALE
6614	1	CAM
6615	1	SET SCREW, CAM
6616	1	BEARING
6617	4	BOLT, PUMP FRAME
6618	1	COVER
6619	2	COVER, SCREWS
6620	2	GREASE FITTINGS
6621	1	LIQUID END, HOUSING
6622	3	SET SCREW, LE HOUSING
6623	1	COVER, LE HOUSING
6624	4	SCREW, COVER LE
6625	1	PLUG
6626	1	GASKET
6627	1	REFILL VALVE
6628	1	RELIEF VALVE
6629	1	BLEED PLUG
*6630	1	SLIDE BLOCK
6631	1	RING, SNAP
*6632	1	PLUNGER
6633	1	SEAL
6634	1	RETAINER, SEAL
6635	1	SET SCREW
*6636	1	SLEEVE
6637	1	O-RING SLEEVE DIA
6638	1	O-RING SLEEVE END
*6639	1	DIAPHRAGM HEAD
6640	8	BOLT, DIAPHRAGM HEAD
6641	1	SUPPORT PLATE
6642	1	CONTOUR PLATE
6643	1	DIAPHRAGM
6644	1	O-RING, DIAPHRAGM
*6645	2	BALL CHECK
*6646	2	ELBOW (OPTIONAL)
*6647	1	EXTENSION NIPPLE (OBSOLETE)
6648	1	OIL
6650	1	BASE
6651	1	DOWEL PIN
6652	2	SCREW
6653	1	BELL CRANK
6654	1	ROD, BELL CRANK
6655	1	ROD, LEVER
6656	1	SPRING
6657	2	NUT
6658	1	ADJUSTING BLOCK
6659	1	LEVER
6660	1	BUSHING, LEVER
6661	1	SCREW
6662	1	WASHER
6663	1	GUIDE BUSHING
6664	1	O-RING, GUIDE BUSHING
6665	1	O-RING, REFILL VALVE
6666	1	OIL SEAL
6667	1	SCREW
6668	1	WASHER
6669	1	NUT
6670	1	LOCKWASHER
6671	1	COVER, ROD
6672	1	CAM LUBRICATOR ASSY.

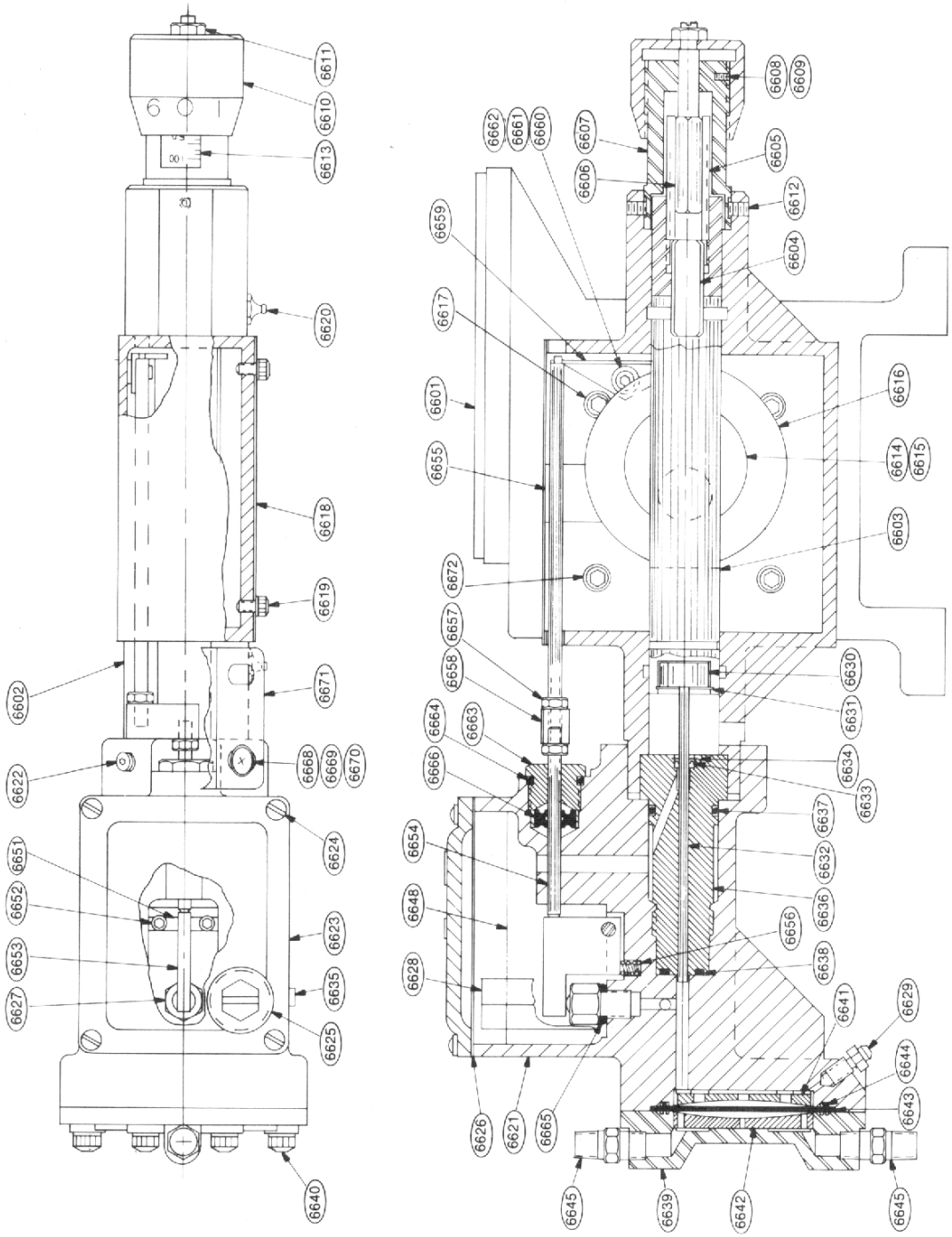

*PUMP SERIAL & MODEL NUMBERS REQUIRED TO ACCURATELY SPECIFY PARTS THAT VARY BY PLUNGER SIZE OR MATERIAL.
INFORMATION SUBJECT TO CHANGE WITHOUT NOTICE.

AquFlow® Series 900
Dimensions

Dimensions: (inches – reference only)

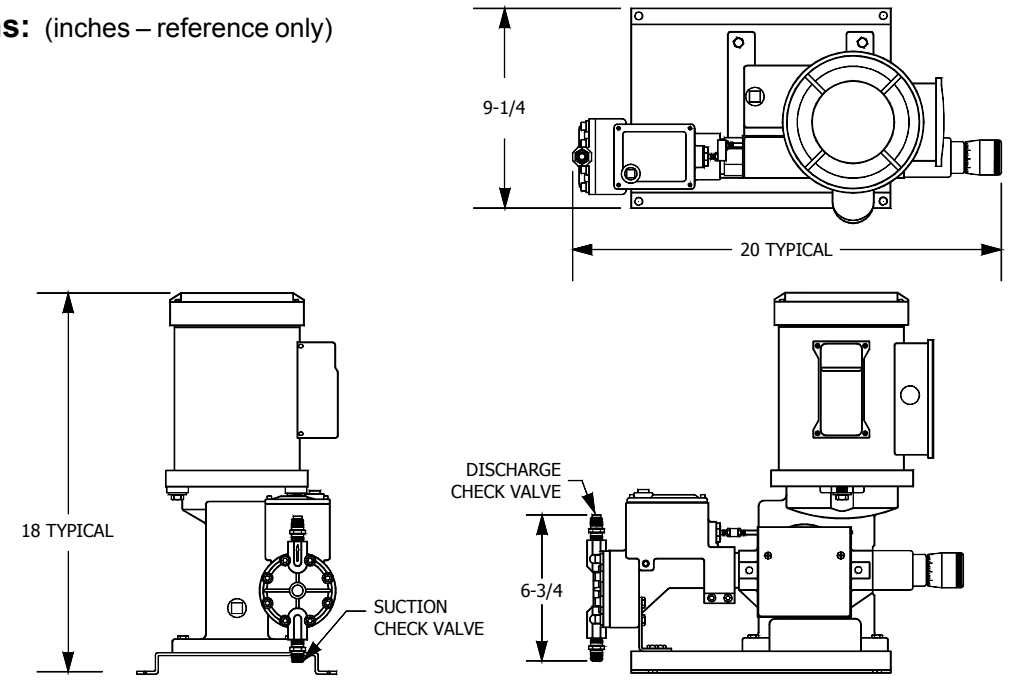

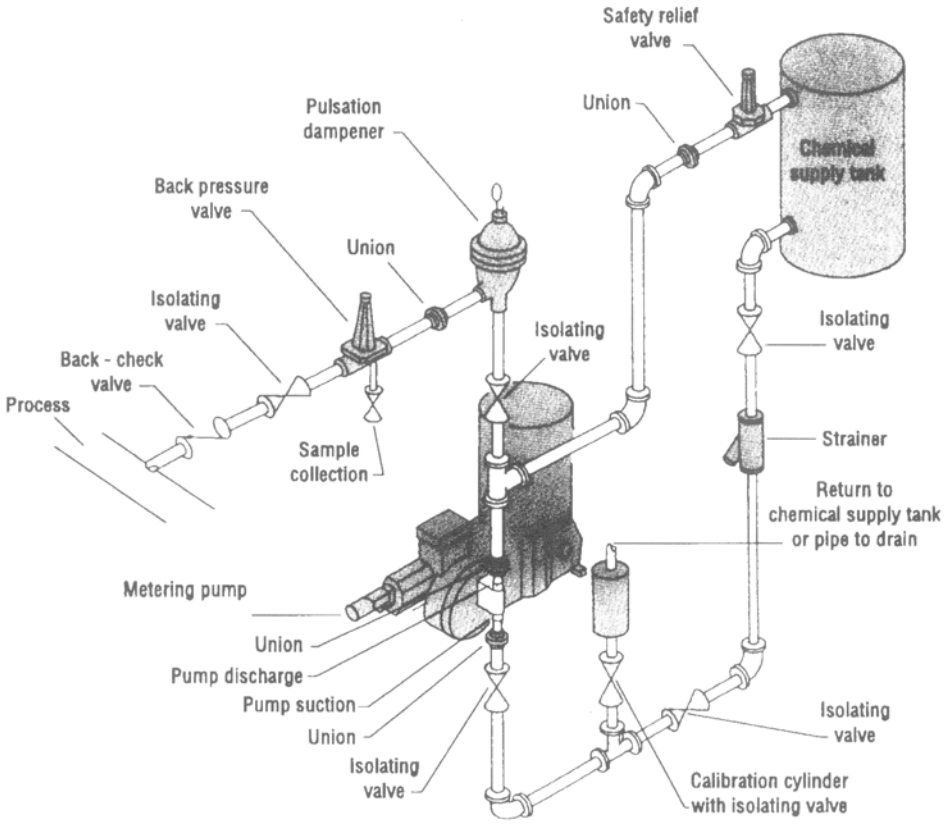

TYPICAL METERING PUMP INSTALLATION

AquFlow

1642 McGaw Avenue

Irvine, CA 92614

Ph: 949-757-1753 E-Mail:sales@aquflow.com